Data Sheet

Article number: 2033100M1675B1U
Description: E+G levelling foot
GN 33-100-M16-75-B1-U, Stainless steel
Note: U Without nut, Hexagon socket at the top, Wrench flat at the bottom

Measures

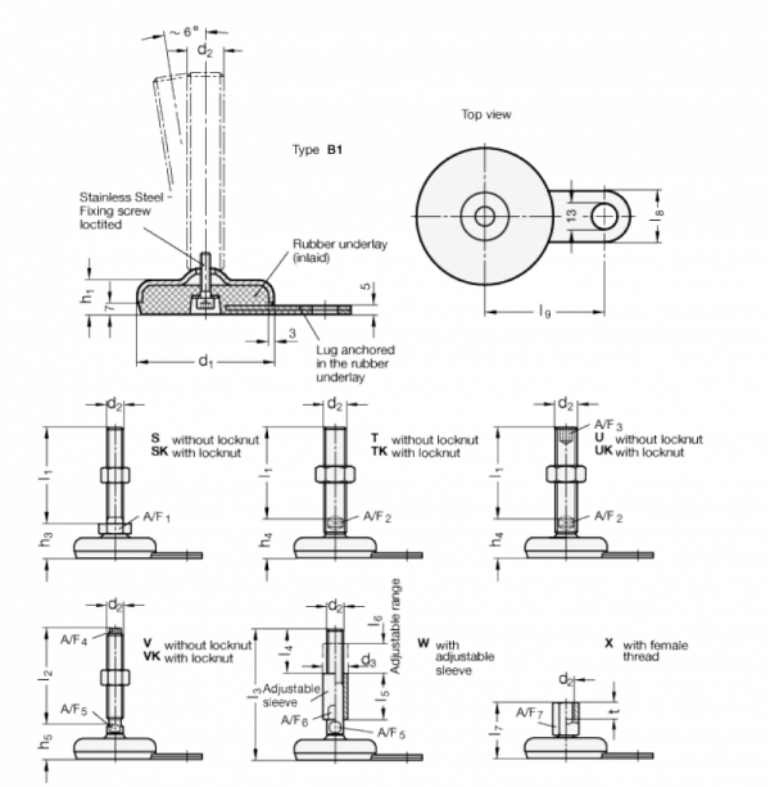

A/F2 = 12	I9 = 80
A/F3 = 8	
d1 = 100	
d2 = M16	
h1 = 18	
h3 = 35	
I1 = 75	
I8 = 30	

Product drawings and brochures of any kind may contain errors for which Brd. Klee A/S cannot be liable.